EC frameless 45 flat ∅43.4 mm, brushless, 30 watt

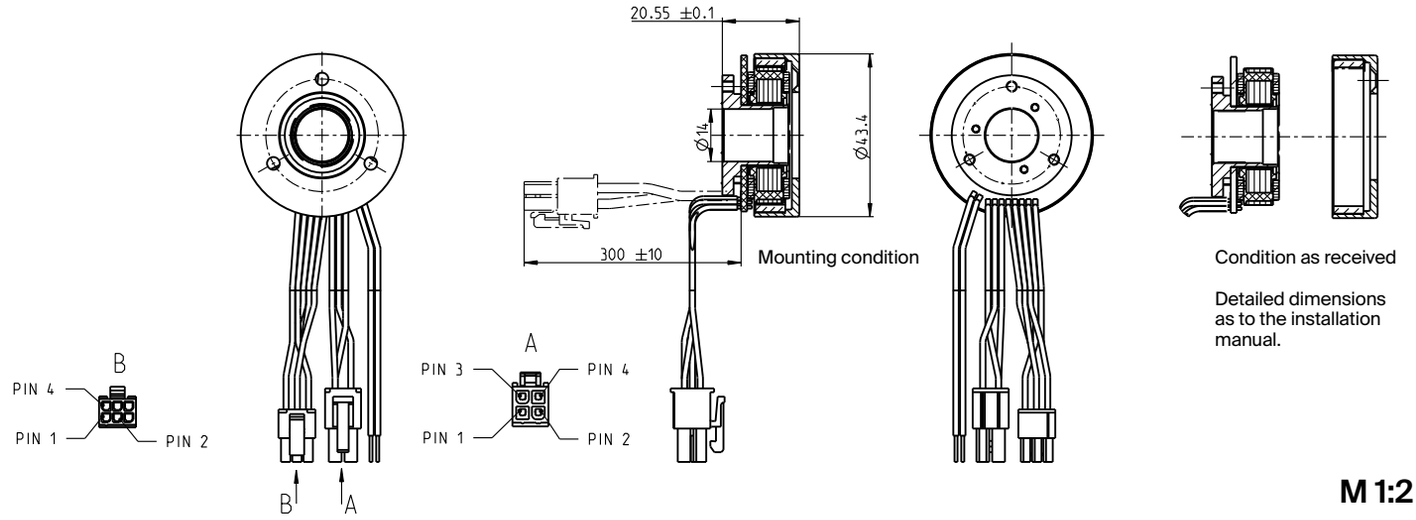

EC frameless

Stock program
Standard program
Special program (on request)

	Part Numbers			
with Hall sensors	548273	574536	574537	574538
Motor Data				
Values at nominal voltage				
1 Nominal voltage (V)	12	18	24	36
2 No load speed (rpm)	4360	4890	4360	4750
3 No load current (mA)	163	129	81.4	61.6
4 Nominal speed (rpm)	2910	3510	2930	3290
5 Nominal torque (max. continuous torque) (mNm)	54.9	57.8	54.7	66
6 Nominal current (max. continuous current) (A)	2.02	1.63	1.01	0.847
7 Stall torque (mNm)	247	295	251	378
8 Stall current (A)	9.69	8.61	4.93	5.35
9 Max. efficiency (%)	76.3	77.5	76.5	80.1
Characteristics				
10 Terminal resistance phase to phase (Ω)	1.24	2.09	4.87	6.73
11 Terminal inductance phase to phase (mH)	0.56	0.697	2.24	4.29
12 Torque constant (mNm/A)	25.5	34.3	51	70.6
13 Speed constant (rpm/V)	374	278	187	135
14 Speed/torque gradient (rpm/mNm)	18.2	17	17.9	12.9
15 Mechanical time constant (ms)	28.6	30.8	28.1	20.2
16 Rotor inertia (gcm^2)	150	150	150	150

Specifications

Thermal data	
17 Thermal resistance housing-ambient	6.73 K/W
18 Thermal resistance winding-housing	3.92 K/W
19 Thermal time constant winding	11.4 s
20 Thermal time constant motor	296 s
21 Ambient temperature	-40...+100°C
22 Max. winding temperature	+125°C
Mechanical data	
23 Max. speed	10000 rpm
Other specifications	
29 Number of pole pairs	8
30 Number of phases	3
31 Weight of motor	89 g
Weight of rotor	35 g
Weight of stator	54 g

Values listed in the table are nominal.

Operating Range

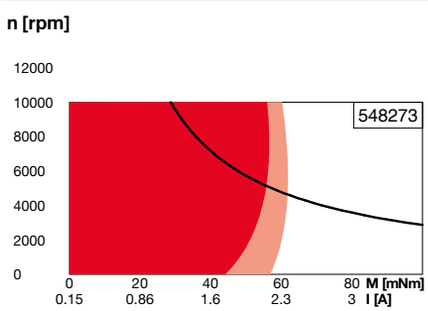

Continuous operation
Continuous operation with reduced thermal resistance R_{th2} 50%
Intermittent operation
Assigned power rating

Comments

Connection motor (Cable AWG 24)

red	Motor winding 1	Pin 1
black	Motor winding 2	Pin 2
white	Motor winding 3	Pin 3
	N.C.	Pin 4

Connector	Part number
Molex	39-01-2040

Connection sensors (Cable AWG 24)

yellow	Hall sensor 1*	Pin 1
brown	Hall sensor 2*	Pin 2
grey	Hall sensor 3*	Pin 3
blue	GND	Pin 4
green	V_{Hall} 4.5...24 VDC	Pin 5
	N.C.	Pin 6

Connector	Part number
Molex	43025-0600

Wiring diagram for Hall sensors see p. 59
*Internal pull-up (7...13 kΩ) on pin 5

Connection NTC (Cable AWG 24)

pink	NTC
blue	NTC

Resistance 25°C: 5 kΩ ±1%, beta (25–85°C): 3490 K

maxon Modular System Details on catalog page 46

Recommended Electronics:

Notes	Page 46
ESCON Module 24/2	500
ESCON 36/3 EC	501
ESCON Mod. 50/4 EC-S	501
ESCON Module 50/5	501
ESCON 50/5	503
DEC Module 24/2	505
DEC Module 50/5	505
EPOS4 Micro 24/5	509
EPOS4 Mod./Comp. 24/1.5	510
EPOS4 Mod./Comp. 50/5	510
EPOS4 Comp. 24/5 3-axes	511
EPOS4 50/5	515
EPOS4 Disk 60/12	517
EPOS2 P 24/5	520